A 110 GHz Look-up Table Based InP HEMTs Large-Signal Model Including Impact Ionization Effects

A. Orzati*, D. Schreurs**, L. Pergola*, H. Benedickter*, O. Homan* and W. Bächtold*
*Electromagnetic Fields and Microwave Electronics Laboratory , Swiss Federal Institute of Technology, Zürich, Switzerland
**K.U.Leuven, Div. ESAT-TELEMIC, Kard. Mercierlaan 94, B-3001 Leuven, Belgium
E-mail: orzati@ifh.ee.ethz.ch

Abstract

We have developed a procedure to extract a look-up table based large-signal model for InP HEMTs that achieves good performances up to 110 GHz. In order to speed up both the measurements and the data processing a logarithmic frequency sweep is used. In this way we can reduce significantly the number of measured frequency points while keeping a good resolution in the low frequency range which is important for modeling impact ionization effects.

1 Introduction

InP HEMTs with outstanding performances are mostly used in millimeter-wave circuits, but also for lower frequency applications, e.g. baseband amplifiers or frequency shifting circuits. In order to accurately predict the performance of these circuits it is necessary to have a large signal model that includes effects at mm-wave frequencies as well as in the lower GHz range. Among them is the so called kink-effect due to impact ionization, which occurs from DC up to 7-8 GHz. In this paper, we present a look-up table based InP HEMT model that has been verified up to 110 GHz. This model is, to our knowledge, the first look-up table based model up to millimeter-wave frequencies that takes impact ionization effects into account.

2 Equivalent Circuit

The method we used is an extension of the GaAs PHEMT modeling procedure published in [1]. Modifications to the small-signal equivalent circuit were made in order to model the transistor's behavior in the mm-wave frequency range as well as the impact ionization. At mm-wave frequencies the electrical length of gate and drain metalizations becomes relevant and transmission line effects have to be included [2, 3]. This is achieved by splitting the extrinsic gate and drain capacitances in two parts. We model the impact ionization effect with a network at the drain side of the small signal equivalent circuit [4]. This network consists in a resistance R_{im} in series with the parallel connection of a capacitance C_{im} and a transconductance g_{im} controlled by the intrinsic drain-gate voltage V_{dg}. Small-signal and large-signal equivalent schemes are shown in Figure 1 and 2, respectively. In order to include the impact ionization network in the large signal model we treat it as a first order dispersive network. It is something similar to what is done to model the output dispersion in the kHz-MHz range. Another thing worth noticing is that to obtain the large-signal model we integrate G_m and G_{ds} but not the capacitances. We prefer to use them directly as bias dependent. To complete the model we add the DC measured drain current I_{dsDC} and model the transition between it and I_{dsLF} due to the low frequency dispersion with a first order transfer function (Figure 2).

3 Modeling Procedure

The first step is the extraction of the bias-independent extrinsic elements. This is done from cold ($V_{ds} = 0$) S-parameter measurements following the method described in [5]. Then S-parameter measurements on a grid of 900 different gate and drain voltages are performed. The voltage step becomes smaller close to V_T for the gate voltage and in the linear region for the drain voltage, in order to ensure a better precision in those regions where the bias dependence of intrinsic small-signal elements is higher. The S-parameters are measured up to 110 GHz. Measuring at a single frequency point is not enough to achieve a good model accuracy up to mm-wave frequencies, not to mention that it would be impossible to model impact ionization effects. On the other hand, a linear frequency sweep needs at least 201 points to have a good resolution also in the lower GHz range. Hence we chose to use a 59 points logarithmic sweep which reduces measurement and computation time. The accuracy both in the mm-wave region, where only a small number of data is necessary, and in the impact ionization region are nevertheless assured. Both measurements and extraction are implemented using HP ICCAP. Numerical integration is performed using MATLAB routines and the model is implemented as "Symbolically Defined Device" in the HP ADS simulator.

4 Model Validation

Validation of the model has been carried out for small-signal and large signal behaviour. A comparison with measured S-parameters shows a good accuracy in the mm-wave range as well as in the impact ionization region (Figure 3). Simulations of output power at different harmonics and different bias points have been confirmed by measurements. An example is showed in Figure 4.

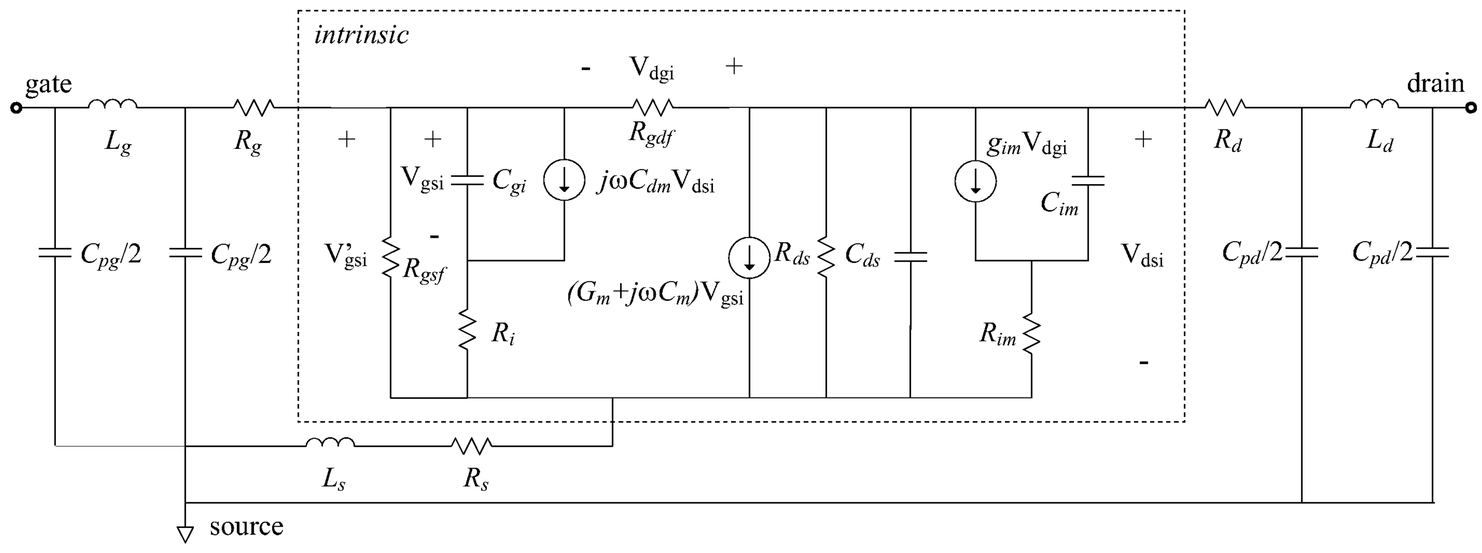

Figure 1: Small-signal Equivalent Scheme

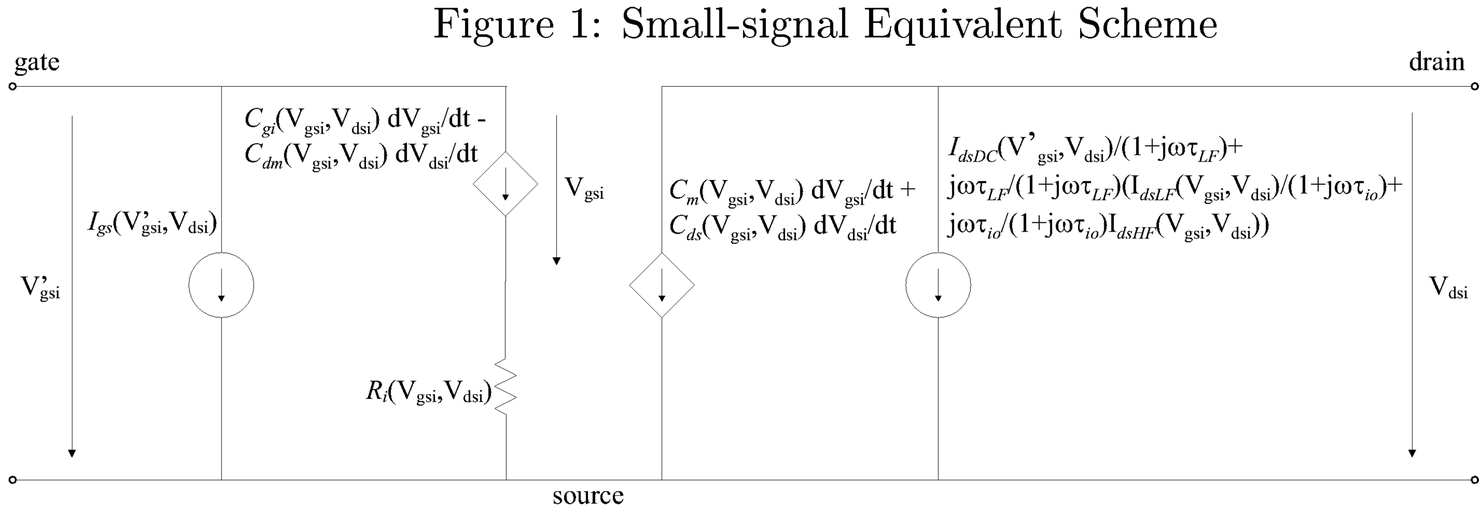

Figure 2: Large-signal Equivalent Scheme

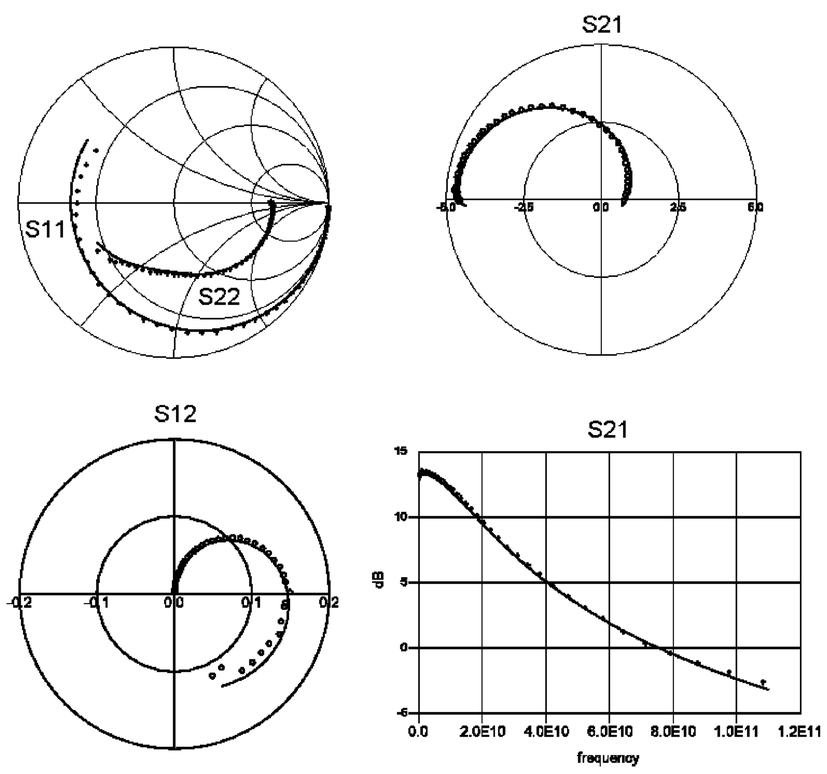

Figure 3: Measured (dots) and simulated (solid line) S-parameters ($V_{gs} = -0.2V, V_{ds} = 1V$)

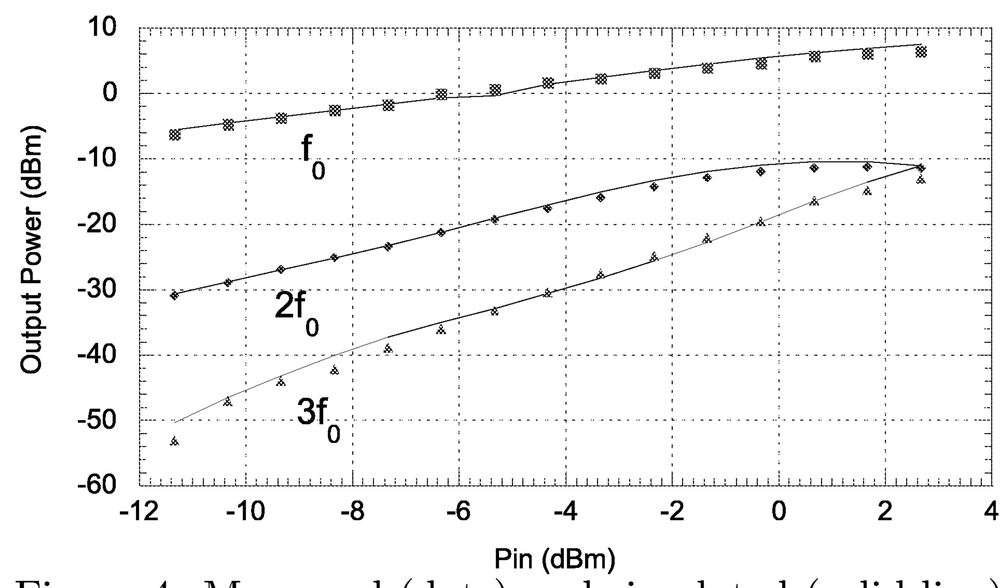

Figure 4: Measured (dots) and simulated (solid line) harmonics ($f_0 = 16GHz, V_{gs} = -0.35V, V_{ds} = 1V$)

References

[1] Ph. Jansen *et al.*, "Consistent Small-Signal and Large-Signal Extractions Techniques for Heterojunction FETs", IEEE Trans. Microwave Theory and Techn., Vol. 43, No. 1, pp. 87-93, 1995.

[2] P. Tasker and J. Braunstein, "New MODFET small-signal circuit model required for millimeter-wave MMIC design: extraction and validation to 120 GHz", Proc. MTT-S Int. Microwave Symposium, 1995, pp. 611-614.

[3] J.Wood and D. Root, "Bias-dependent linear, scalable millimeter-wave FET model", IEEE MTT-S Int. Microwave Symposium, 2000, pp. 1381-1384.

[4] R. Reuter *et al.*, "Investigation and modeling of impact ionization with regard to the RF and noise behaviour of HFET", Proc 24th European Microwave Conference, pp. 854-859, 1994.

[5] D. Schreurs *et al.*, "S-Parameter Measurements Based Quasi-Static Large-Signal Cold HEMT Model For Resistive Mixer Design", Int. J. Microwave and Millimeter-Wave Computer-Aided Engineering, Vol. 6, No. 4, pp. 250-258, 1996.